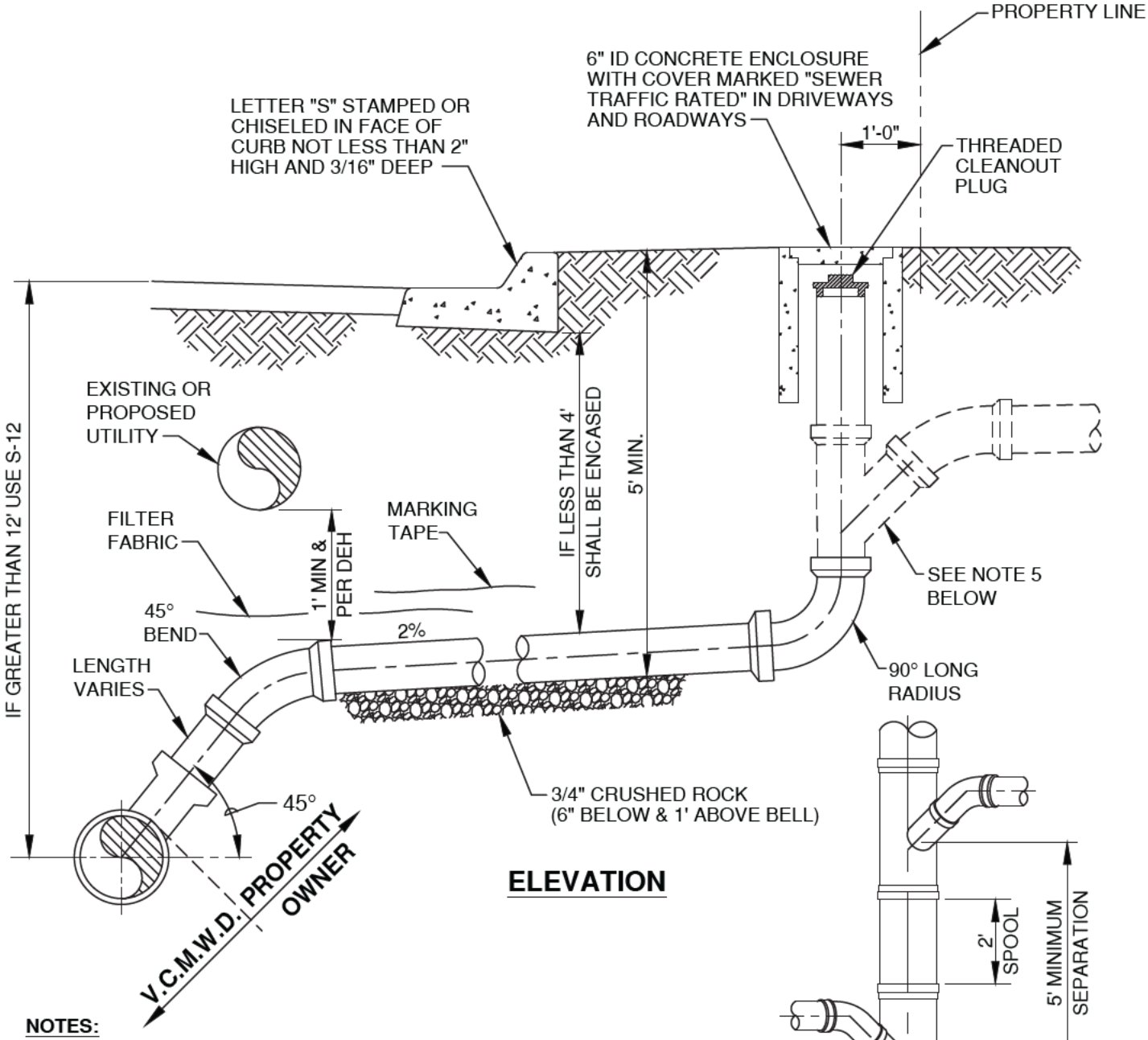

ELEVATION

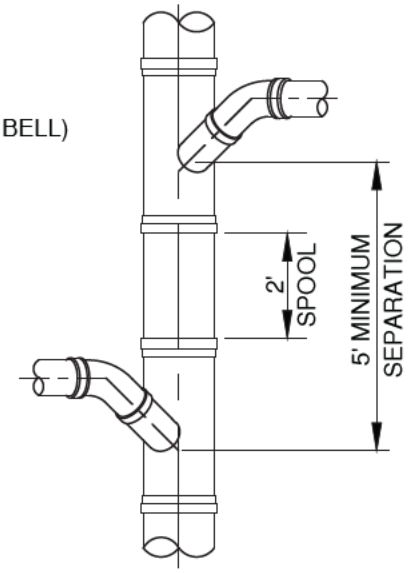

PLAN

DETAIL SHOWING THE MANNER OF CONNECTING OPPOSITE LATERALS TO A SEWER MAIN. TWO CONNECTIONS SHALL NOT BE MADE IN THE SAME LENGTH OF PIPE.

NOTES:

1. IN NO CASE SHALL A LATERAL CONNECT TO THE SEWER MAIN DIRECTLY ON TOP OF THE PIPE.
2. SEWER LATERAL SHALL MAINTAIN 2% SLOPE FROM PL TO DROP TO MAIN. DROP TO MAIN WILL VARY AS NEEDED, 1.2' MIN.
3. ALL JOINTS ON SEWER LATERAL PIPE SHALL BE COMPRESSION TYPE OR APPROVED SOLVENT WELD.
4. LATERAL INSTALLATION ON EXISTING MAINS SHALL FOLLOW S-13.
5. WYE CONNECTION TO BE INSTALLED BY PRIVATE PLUMBER AFTER AIR TEST HAS BEEN COMPLETED. CONNECTION TO BE INSPECTED BY THE DISTRICT.
6. SEWER LATERAL INFORMATION SHALL BE PROVIDED IN SEWER LATERAL TABLE.

——————(S)

LEGEND ON PLAN

APPROVED: Wally Grant 3/2/2020 District Engineer Date 3/2/2020 Latest Revision Date	VALLEY CENTER MUNICIPAL WATER DISTRICT STANDARD DRAWING **NEW INSTALLATION PVC SEWER LATERAL**	NOT TO SCALE DWG. NUMBER **S-11**